Bruckner's TRUCK & EQUIPMENT

Bruckner's Truck & Equipment
Retail Proposal

Financing Available!

Scan QR Code to Complete an Application

Date:	**September 25, 2026**

CUSTOMER INFORMATION			
Name:	**Tyler County**		
Name:			
Address:	**100 W Bluff St Rm 203**		
CSZ:	**Woodville, TX 75979**		
Phone:	**409-283-6305**	Cell:	**(409) 429-4887**
Fax:		Contact:	**Donna Hudson**
Email:			

EQUIPMENT INFORMATION			
Stock #:	**72313**	UNITID	**1361222**
Year:	**2027**	BODY	**N/A**
Make:	**Mack**		
Model:	**PI64T**		
VIN:	**1M1PN4GY6VM021065**		
Salesperson:	**Josh Phillips**		

EQUIPMENT SPECIFICATIONS			
Engine Make:	Mack MP8-455C	**Wheelbase:**	231" w/ 1323" Clear CT & 57"
Horsepower:	455hp w/ 1750 Lb-ft Torque	**Frame:**	9.5mm Steel w/ 2,470,000 Lb-in RBM
Engine Brake:	Yes - Mack Powerleash For MP8	**Interior Trim:**	Preferred Steel Gray
Transmission:	Mack - TMD12AFO-HD - 12-Spd mDrive AMT	**Wheels Front:**	Accuride Polished Aluminum
Front Axle:	Mack - 14,600# w/ Disc Brakes	**Wheels Rear:**	Accuride Polished Aluminum
Rear Axle:	Mack - 40,000# w/ Drum Brakes & Ful,l Lock	**Tire Size:**	11R24.5
Rear Suspension:	Mack - 46,000# Air-Ride	**Tire Front:**	Bridgestone R263 Ecopia
Ratio:	3.79	**Tire Rear:**	ridgestone M726 ELA

Chassis Includes the Following Local Extras:

New Truck Prep - Includes Bruckner's PDI, $100
Fuel, Bruckner Mudflaps, Bruckner Floormats,
& Truck Wash w/ Interior Detail.

Belly Dump Switch Installed In Dash
Electric Tarp Switch Installed In Dash
Minimizer Poly 1/2 Fenders Installed
5th Wheel Riser Installed
Purchased Coverage Added To Truck
Chassis Plan 2 - 3yr/300k Miles - $3,614.00
Chassis Tow - 3yr/150k Miles - $803.00
Engine Plan 2 - 4yr/400k Miles - $3,541.00

EATS - 4yr/400k Miles - $1,496.00
Engine Tow - 4yr/400k Miles - $1,945.00
SCQ Quote #6015705

Moved To Bruckner's - Wichita Falls
FOB: Tyler County

Purchased Using Bruckner's HGAC Contract #HT07-26A. HGAC Fee Included.

Trade-In Information:	Trade 1:	Trade 2:	Each		Multiple Total
			$170,330.00		
Allowances:	$95,000.00		(95,000.00)		
VIN:	1M1PN4GY2RM014636				
Year:	2024				
Make:	Mack				
Model:	PI64T				
Payoff:					
Quantity					
OTHER CHARGES:					
Title, and License Fees (Estimated):			-		-
Purchase Coverage	Type: See Coverages Above		11,399.00		-
Insurance	Type:		-		-
Dealer Inventory Tax and Doc Fees			300.00		-
Cash Down Payment:					
TOTAL:			$87,029.00		

Dealer Signature:_____ Customer Signature:_____

Date:_____ Date:_____

A documentary fee is not an official fee. A documentary fee is not required by law, but may be charged to buyers for handling documents and performing services relating to the closing of a sale. A documentary fee may not exceed $300 for a motor vehicle contract or a reasonable amount agreed to by the parties for a heavy commercial vehicle contract. This notice is required by law. The pricing provided herein is per the attached spec and subject to government-mandated adjustments, and any freight adjustments or raw material surcharges imposed by the original equipment manufacturer. Written notice will be given for any such adjustments or surcharges.

MUNICIPAL PURCHASE ORDER

MUNICIPALITY : Tyler County Pct #4

ADDRESS: 100 W Bluff St Rm 203 Woodville, TX 75979

PHONE: 409-283-6305

CONTACT PERSON: Donna Hudson

HGAC BUY CONTACT: HT07-26A DATE: 10/8/2026

SELLER: BRUCKNER TRUCK SALES, INC. DBA BRUCKNER'S TRUCK & EQUIPMENT

ADDRESS: 4520 NW Frwy Wichita Falls, TX 76306

PHONE: 940-855-4051

SALESPERSON: Josh Phillips

VEHICLE DATA:

QUANTITY: 1

YEAR: 2027

MAKE: Mack

MODEL: PI64T

VIN(S): 1M1PN4GY6VM021065

VIN(S) cont.:

UNIT ID(S): 1361222

TOTAL PRICE: $87,030.00 SIGNATURE

QUOTED BY: Stewart Cobb
Investar Bank, N.A. formerly First National Bank
3801 Fairway Blvd., Wichita Falls, TX. 76310
CELL PHONE: 940-613-3998

Tyler County
100 W. Bluff, Room # 110 Woodville, TX 75979
Tax ID # 74-6002576

Lease No:
CONTACT: Jackie Skinner
Tyler County Auditor
BUSINESS PHONE: 409-283-3652
Date: 09/01/2026
Acceptance Date:

FUND DATE:

SOURCE: 3 Year Lease Purchase with Trade Back from Bruckners

EQUIPMENT: Pct. 4		
2027 Mack P164T Haul Truck	$185,363.00	**Bruckner Truck - HGAC Contract**
VIN# 1M1PN4GY1VM021717	$0.00	
	$0.00	
Trade in 2024 Mack P164T Truck (I.B. # 30032223)	-$95,000.00	
VIN# 1M1PN4GY2PM014636	$0.00	
Payoff I.B.# 30032223	$99,800.00	**Good till 12/10/2026**
FREIGHT/HANDLING:	$0.00	
TOTAL PURCHASE PRICE	$190,163.00	
Doc Fee	$350.00	
Down Payment	-$19,107.00	**Final Payment as Down Payment for Ln. # 30032223 due 11/10/2026**
Net Capitalized Cost	**$171,406.00**	

Date	Lease Payment	Days Accrual	Accr. Interest	Principal	Note Balance
11/10/26	0.00	0	0.00	0.00	0.00
11/10/27	28,953.03	365	9,135.94	19,817.09	151,588.91
11/10/28	28,953.03	365	8,079.69	20,873.34	130,715.57
11/10/29	28,953.03	365	6,967.14	21,985.89	108,729.68
12/10/29	109,205.00	30	476.33	108,728.67	1.00

3 yr. Guaranteed Trade Back From Bruckners $109,205.00

Net Capitalized Cost	171,406.00	$24,659.09
Interest Rate	5.3300%	
Residual Value	**$1.00**	
Rounding Adjustment	0.00	
Adjusted Res. Value	**$1.00**	

TECHNICAL SPECIFICATION

PINNACLE 64T DAYCAB

	MODEL DEFINING		DESCRIPTION	WEIGHT (LB) FRONT	WEIGHT (LB) REAR
	PB100M	PRICE BOOK LEVEL	2027A Pricebook	0	0
S	LAX05X	VOLTAGE	ELECTRICAL SYSTEM 12 VOLT	0	0

	APPLICATION PACKAGES		DESCRIPTION	WEIGHT (LB) FRONT	WEIGHT (LB) REAR
	MPK11K	CHASSIS CONFIGURATION PACKAGE	ONEBOX EATS, RIGHT FRONT BATTERY BOX, 18.4 GALLON (70L) DEF, DUAL 26" FUEL TANKS	0	0

	CUSTOMER/VEHICLE INFO		DESCRIPTION	WEIGHT (LB) FRONT	WEIGHT (LB) REAR
S	0029J2	CHASSIS (BASE MODEL)	PINNACLE 64T DAYCAB	5,038	2,090
	MP2001	CUSTOMER FLEET SIZE	DEALER FLEET WITH LESS THAN 25 VEHICLES IN OWN FLEET OF ANY VEHICLE BRAND	0	0
S	M45001	ORDER TYPE REQUIREMENTS	RETAIL OR STOCK - CUSTOM SPECIFICATIONS	0	0
S	013001	TYPE OF SERVICE	COMMERCIAL	0	0
S	M98018	WARRANTY REGISTRATION LOCATION	USA - WARRANTY REGISTRATION LOCATION	0	0
	MBT01T	EMISSION WARRANTY CERTIFICATION	EPA (only) for Mack MP7 / MP8 Diesel	0	0
	694DDD	Order Subject to Meeting All Mack Policies, Terms and Conditions,	Including but not Limited to Applicable CARB and/or Section 177 States' Regulation requirements	0	0
	M84004	INTENDED REGISTRATION LOCATION	ARKANSAS	0	0
S	5050B5	INITIAL REGISTRATION LOCATION	USA REGISTRATION	0	0
	5FFA1X	BRAND ORNAMENT	BULLDOG, GOLD	0	0
S	534014	LANGUAGE-PUBS/DECAL/SIGNS	ENGLISH	0	0
	005005	VEHICLE USE & BODY/TRAILER TYPE	VAN TRAILER	0	0
S	78XB1X	TRANSPORT CYCLE	LOCAL DISTRIBUTION	0	0
S	DKXG2X	GROSS COMBINATION WEIGHT (CA in PC29 only)	80,000 LB (36 TONNES) GROSS COMBINATION WEIGHT	0	0
S	7OBC1X	BRAKE REGULATION	BRAKE REGULATION, STOPPING DISTANCE 76M (250FT)	0	0
	QCXA1X	TOPOGRAPHY	GRADES <3% GREATER THAN 98% OF DRIVING DISTANCE MAX GRADE 8%	0	0
S	E1BD1X	AMBIENT TEMP UPPER LIMIT	AMBIENT TEMPERATURE HOT. WARMER THAN 104 F (40 C) ALLOWED UP TO 25 HOURS PER YEAR	0	0
S	032A79	OPERATING TERRAIN GRADE CONDITIONS	ON HIGHWAY, STARTING GRADES<16%	0	0
S	033A10	LOADING SURFACE FACTOR	CONCRETE LOADING AND / OR UNLOADING SURFACE	0	0
	0341A1	VEHICLE VOCATION	LINEHAUL / LONG HAUL SERVICE	0	0

	ENGINE/TRANSMISSIONS		DESCRIPTION	WEIGHT (LB) FRONT	WEIGHT (LB) REAR
	100490	ENGINE / MOTOR	MP8-455C MACK 455HP @ 1400-1700 RPM (PEAK) 2100 RPM (GOV) 1750 LB-FT, US'21	2,108	530
S	Q1CA1X	GEAR SELECTION TUNING	BASIC, GEAR-SELECTION TUNING	0	0
S	3GCA1X	GHG APPLICATION, VEHICLE	GREEN HOUSE GAS HIGHWAY APPLICATION	0	0
	1360Z6	TRANSMISSION	MACK TMD12AFO-HD mDRIVE HD 12 SP-(OVERDRIVE)	503	168
S	V4EZ9X	GEARBOX 12TH GEAR LOCK-OUT	WITHOUT 12TH GEARBOX GEAR LOCK-OUT	0	0

TECHNICAL SPECIFICATION *(cont.)*

	EXHAUST/EMISSIONS		DESCRIPTION	WEIGHT (LB) FRONT	WEIGHT (LB) REAR
	Z8FT1X	NOX LIMITS	CARB LEGACY / EPA (200MG/HP/HR), 50 State Idle Compliance	0	0
S	Y7BC1X	IDLE EMISSION LABEL LOCATION (CA in PC29 only)	IDLE EMISSION LABEL LOCATION, LOWER LH CORNER OF DRIVER DOOR	0	0
S	DPF04F	DPF DIESEL PARTICULATE FILTER	CLEARTECH ONE BOX E.A.T.S. RH SIDE UNDER CAB US17 / US21	0	0
	MCF05F	CHASSIS MOUNTED EMISSIONS FINISH	BRIGHT FINISH DEF COVER & STAINLESS STEEL DPF COVER	0	0
S	DF10N1	DIESEL EXHAUST FLUID TANK	18.4 GALLON (70 L) 26" LEFT SIDE FRAME MOUNTED	190	67
	6MDA1X	DEF TANK VENTILATION FILTER	DEF TANK VENTILATION FILTER	0	3
	130AC4	EXHAUST	DUAL VERTICAL OUTBOARD MOUNTED STRAIGHT EXHAUST STACK TURNED OUT END	89	51
	KRXB1X	EXHAUST STACK HEIGHT	12' 6" FROM GROUND	0	0
	Q0AF2X	EXHAUST - BRIGHT FINISH	DUAL, BRIGHT FINISH HEAT SHIELDS, STACKS, ELBOWS	0	0

	ENGINE EQUIPMENT		DESCRIPTION	WEIGHT (LB) FRONT	WEIGHT (LB) REAR
S	125065	AIR CLEANER	UNDER HOOD SINGLE ELEMENT DRY TYPE W/AIR INTAKE FROM BOTH SIDES OF HOOD&FILTER MTD AIR RESTRICTION I	0	0
S	121AA5	BUG SCREEN	BLACK ALUMINUM BUG SCREEN MOUNTED BEHIND GRILLE, WITHOUT WINTER FRONT COVER	0	0
S	1130G3	AIR COMPRESSOR/DRYER	WABCO HEATED SS-HP AIR DRYER W/ WABCO 636 (37.4 CFM) AIR COMPRESSOR	0	0
S	851004	AIR DRYER POSITION (CA)	STANDARD AIR DRYER LOCATION	0	0
	132AB8	ALTERNATOR	DELCO 12V 165A (36SI) BRUSHLESS W/ REMOTE VOLTAGE SENSING	27	0
	316AA7	BATTERIES	(3) MACK 12V 1000/3000 CCA THREADED STUD TYPE	16	7
S	393AA9	BATTERY BOX - MOUNTING (x)	RH RAIL UNDER CAB (3 BATTERY MAX)	0	0
	L5XF1X	BATTERY BOX COVER	POLISHED ALUMINUM	5	0
	318AA3	BATTERY DISCONNECT SWITCH	FLAMING RIVER BIG SWITCH WIRED TO POSITIVE SIDE	3	0
	NCXD1X	STARTER MOTOR	12 VOLT MELCO STARTER (MITSUBISHI ELECTRIC)	31	0
	110AA6	ENGINE BRAKE	MACK MP8 POWERLEASH	0	0
S	JMXB1X	VEHICLE/TRAILER STOP LAMP APPLICATION (CA)	VEHICLE AND TRAILER (IF APPLICABLE) STOP LAMPS ACTIVATE UPON SERVICE BRAKE APPLICATION ONLY(3899000)	0	0
S	J2EAAX	ENGINE BRAKE ACTIVATION	ENGINE BRAKE ACTIVATION, BASIC	0	0
S	118AB8	FAN DRIVE	BEHR FAN AND ELECTRONIC MODULATING VISCOUS FAN DRIVE	0	0
S	119AI9	COOLANT PROTECTION	ETHYLENE GLYCOL FULLY FORMULATED COOLANT (50/50 MIX DYED PINK) TO -34DEG, W/ FILTER	0	0
	H9XK1X	RADIATOR TYPE	RADIATOR, CORE AREA W/O FEPTO 1345sq in (86sq dm), CORE AREA W/ FEPTO 1296sq in (83sq dm)	0	0
S	124AA3	HOSES - RADIATOR/HEATER	MACK EPDM RADIATOR & HEATER HOSES	0	0
	2930B3	FUEL-WATER SEPARATOR	DAVCO 386 (W/O FLUID HEAT) 12V PREHEAT & MACK SEC FUEL FILTER	14	0
S	MBXA1X	RELOCATE FUEL FILTER (CA)	STANDARD FUEL FILTER POSITION	0	0
S	MCA04A	ENGINE HEATERS	120v 1500w BLOCK HEATER ONLY	0	0
	5NXA1X	ENGINE BLOCK HEATER	120V 1500W ENGINE BLOCK HEATER	5	0
	MAH01I	PLUG QUANITY & TYPE	SINGLE (1) 120V-15A PLUG	0	0
S	QHXC1X	OIL SUMP	OIL PAN	0	0
S	36AA1X	TETHER DEV PKG, CAPS & COVERS	FURNISH CAP RETAINER FOR OIL FILL & RADIATOR OVERFLOW TANK	0	0
S	2YBZ1X	EMERGENCY ENGINE STOP (CA)	WITHOUT ENGINE STOP, EMERGENCY	0	0

TECHNICAL SPECIFICATION *(cont.)*

	CLUTCH/TRANS EQUIPMENT		DESCRIPTION	WEIGHT (LB) FRONT	WEIGHT (LB) REAR
S	49200B	GEAR SHIFTER	MACK mDRIVE-PREMIUM SHIFTER	0	0
S	133AC7	CLUTCH	ZF/SACHS SINGLE PLATE 17" (430MM) ORGANIC MATERIAL	0	0
S	MCB05B	CLUTCH ACTUATION SYSTEM & PEDAL PAD	WITHOUT CLUTCH CABLE SYSTEM	0	0
S	195AA6	DRIVELINE - MAIN	MERITOR RPL25 W/PERMALUBE U-JOINTS (PROPS-M)	14	14
S	204AA4	DRIVELINE - INTERAXLE	MERITOR RPL20 W/PERMALUBE	0	34
S	76AA1X	DRIVESHAFT MAIN U-JOINT	UNIVERSAL JOINT HALF-ROUND TYPE (where applicable)	0	0
S	8WAAAX	DRIVESHAFT INTERAXLE U-JOINT	HALF-ROUND UNIVERSAL JOINT	0	0
	4LDALX	TRANSMISSION OUTPUT TORQUE	TRANSMISSION OUTPUT TORQUE SMOOTH DUTY APPLICATION	0	0
	7RXD1X	LUBRICANTS, TRANSMISSION	75W - 90 (SYNTHETIC LUBRICANT)	0	0
S	139049	TRANSMISSION OIL COOLER	MACK mDRIVE TRANSMISSION OIL COOLER MOUNTED LH SIDE OIL TO WATER COOLER	0	0
	3IAA2X	GRADE GRIPPER	GRADE GRIPPER	0	0

	FRONT AXLE EQUIPMENT		DESCRIPTION	WEIGHT (LB) FRONT	WEIGHT (LB) REAR
	240AA7	FRONT AXLE	14600# (6600 KG) MACK FXL14.6 STRAIGHT SPINDLE/UNITIZED BEARINGS	69	0
	244AA9	SPRINGS - FRONT	MACK TAPERLEAF 14600# (6600 KG) GROUND LOAD RATING, EQUAL BIAS	16	0
S	2410K1	BRAKES - FRONT	MERITOR EX+ AIR DISC BRAKES 430MM (17") L-TYPE	25	0
S	U3XD1X	BRAKE DRUMS - FRONT	FRONT BRAKE DISC LIGHTWEIGHT	23	0
S	U0AF1X	SLACK ADJUSTERS - FRONT	AUTOMATIC FOR AIR DISC BRAKES	0	0
S	V7AF1X	BRAKE CHAMBERS - FRONT	FRONT BRAKE CHAMBER MANUFACTURER, WABCO	0	0
S	0KXG1X	HUBS - FRONT	BASIC HUB UNITIZED IRON, FRONT	106	0
S	61500A	FRONT AXLE LUBRICANT	FRONT AXLE LUBE, FAG NLGI2 GREASE	0	0
S	245AA5	STEERING	TRW THP60 POWER	64	0

	REAR AXLE EQUIPMENT		DESCRIPTION	WEIGHT (LB) FRONT	WEIGHT (LB) REAR
	268055	REAR AXLE	40000# (18100kg) MACK S400R FABRICATED STEEL HOUSING	0	1,445
S	6MAA1X	WIDE TRACK AXLE OPTION	W/O WIDE TRACK AXLE	0	0
S	617003	DRIVE AXLE LUBRICANT	DRIVE AXLE LUBE, SHELL 75W90 SYNTHETIC OIL	0	0
	01800R	CARRIER - REAR AXLE	150/151 SERIES (Tandem Mack Rear Axles up to 150,000lb GCW)	0	0
	254015	TRACTION DIFFERENTIAL	INTERWHEEL DIFFERENTIAL LOCK, ALL REAR AXLES w/ INDEPENDENT SWITCHES	0	0
S	3LAC1X	POWER DIVIDER LOCKOUT	INTERAXLE POWER DIVIDER LOCKOUT, W/BUZZER & LIGHT	0	40
	TAXAVX	REAR AXLE RATIO	3.79 RATIO	0	0
	186AB6	REAR SUSPENSION	MACK AL-461 AIR 46,000 lb (NOT FOR USE WITH AIR DISC BRAKES)	0	1,145
S	GWXBYX	BOGIE SPREAD, REAR	52" AXLE SPACING (BOGIE WHEELBASE)	0	5
S	ZAXA1X	SUSPENSION LEVELING DEVICE	ELECTRICAL REGULATION LEVELING DEVICE	0	3
S	J6DB1X	AIR SUSPENSION DUMP WARNING	AIR SUSPENSION DUMP, SPEED LIMITED, WARNING INDICATOR & BUZZER	0	0
S	YVXA1X	SHOCK ABSORBERS - REAR	REAR SHOCK ABSORBER	0	27
S	XYXA1X	TRANSVERSE TORQUE RODS	TRANSVERSE TORQUE ROD - ALL AXLES	0	0
S	237037	AUX.SPRING BRAKE QTY	AUX SPRING BRAKE QTY, 4 CHAMBERS	0	20
	253AA4	BRAKES - REAR	MERITOR "S" CAM 16.5"x7" Q+ (Total for QTY = 2)	0	27
S	U4XC9X	BRAKE DRUMS - REAR	BRAKE, DRIVE REAR, DRUM LIGHT WEIGHT TRUTURN	0	0

TECHNICAL SPECIFICATION *(cont.)*

	REAR AXLE EQUIPMENT		DESCRIPTION	WEIGHT (LB) FRONT	WEIGHT (LB) REAR
S	U1AA1X	SLACK ADJUSTERS - REAR	HALDEX - AUTOMATIC (Total for QTY = 2)	0	0
	V1AB1X	REAR BRAKE CHAMBER SIZE	REAR SPRING BRAKE CHAMBERS 30/30 TYPE	0	0
	N5FAFX	BRAKE ORI REAR-MOST DRIVE AXLE	DRUM BRAKE CHAMBER ORIENTATION: Middle Mount - Forward of Axle - Chamber Up	0	0
S	300AS0	PARKING BRAKE CHAMBER	HALDEX "GOLD SEAL PLUS" (3" STROKE) BRAKE CHAMBERS (Total for QTY = 2)	0	0
	0LXI5X	HUBS - REAR	IRON PRESET REAR HUB W/INTEGRATED SPINDLE NUT	0	318
S	698098	ANTILOCK BRAKE SYSTEM	MACK ROAD STABILITY ADVANTAGE BENDIX ABS/ATC/ESP W/YAW CONTROL 4S4M	7	0
S	URXD1X	AIR SYSTEM VALVE VENDOR	BENDIX SWITCHES AND VALVES WHERE POSSIBLE	0	0
S	3ZAA1X	SPRING BRAKE INVERSION VALVE	TRACTOR SPRING BRAKE INVERSION VALVE	5	0

	FRAME EQUIPMENT/FUEL TANKS		DESCRIPTION	WEIGHT (LB) FRONT	WEIGHT (LB) REAR
	271231	WHEELBASE	231"	95	95
S	374056	AF (OVERHANG)	56"	-4	161
	MCE08E	FRAME RAILS & LINERS	9.5 x 90 x 300mm - (0.37" x 3.54" x 11.81"); RBM 2,470,000 LB-IN	0	0
S	A0XH2X	FRONT FRAME LENGTH	Standard Bumper Position	47	-2
S	281AA2	CROSSMEMBERS	STEEL	0	0
S	Q5AC4X	REAR CROSSMEMBER OPTIONS	BOXED AND TAPERED CLOSING CROSSMEMBER FOR USE W/ BUILT IN TAIL LAMPS	-8	49
S	X6XCBX	TAPERED FRAME RAIL ENDS	FURNISH TAPERED & FLANGED FRAME RAIL ENDS (28 DEG) FOR USE W/BUILT IN TAIL LAMPS	0	0
	69XC5X	MUD FLAP BRACKETS	BETTS B60 (ANGLED) PAINTED STEEL W/INTEGRATED REFLECTIVE TAPE	0	20
	67XG1X	MUD FLAP, REAR AXLE	BLACK POLYETHYLENE WITH WHITE "MACK" LETTERS	0	14
S	2HXA1X	MUD FLAP, FRONT AXLE	BLACK POLYARMOUR (NO NAME TO APPEAR ON FLAP) (NOT ANTI-SPRAY TYPE)	0	0
S	4DXP1X	FRONT BUMPER	FLUSH-STAINLESS CLAD ALUMINUM	98	-4
S	2RAA1X	FUEL LEVEL SENDER UNIT, LIQUID	BASIC FUEL LEVEL SENDER MOUNTED ON L.H TANK	0	0
S	288AB7	FUEL TANK - LH	93 GALLON (350 L) 26" ALUMINUM ROUND	175	73
S	290AB7	FUEL TANK - RH	93 GALLON (350 L) 26" ALUMINUM ROUND	148	98
	R0AA1X	FUEL TANKS - BRIGHT FINISH	POLISHED ALUMINUM	0	0
S	JHXB1X	FUEL LINE MATERIAL	BRAIDED HOSE	5	3
S	8520C2	FUEL FILLER NECK OPTIONS	WITHOUT FILLER NECK SCREEN, WITH NON-LOCKABLE FUEL TANK CAP	0	0
	12AC1X	FUEL SYSTEM - DUAL	DUAL DRAW AND RETURN FUEL SYSTEM	0	0
S	Q2AA1X	CAB ACCESS STEPS	STANDARD 2 STEP CAB ACCESS	0	0
	223AA2	STEPS (BRIGHT) - FUEL TANK	BRIGHT FINISH ALUMINUM STEPS & STAINLESS STEEL BRIGHT FINISHED STRAPS	0	0
	464AA5	QUARTER FENDERS	STAINLESS STEEL QUARTER FENDERS	0	20

	AIR/BRAKE		DESCRIPTION	WEIGHT (LB) FRONT	WEIGHT (LB) REAR
S	141AA1	RELOCATE AIR RESERVOIRS	W/O RELOCATED AIR TANKS	0	0
S	UWXD1X	AIR TANK DRAIN VALVE	MANUAL DRAIN VALVES, WITH LANYARD ON SUPPLY TANK ONLY	0	0
S	U2XA1X	AIR TANK MATERIAL & FINISH	ALUMINUM AIR TANK PAINTED CHASSIS COLOR	-13	-4
S	3MBA1X	PARK BRAKE ALARM	ALARM TO SOUND WHEN DRIVER DOOR OPENED & PARKING BRAKE NOT ON	0	0
S	1JAABX	PARKING BRAKE VALVE	TWO (2) VALVE DUAL BRAKE SYSTEM - TRAILER SUPPLY AND TRACTOR-TRAILER PARK	0	0

TECHNICAL SPECIFICATION *(cont.)*

				WEIGHT (LB)	
ELECTRICAL			**DESCRIPTION**	FRONT	REAR
	5RXA6X	BACK-UP ALARM	ECCO BACK-UP ALARM 575 CONSTANT SOUND LEVEL 107 dB	0	3
	EAXB1X	DASH MOUNTED SWITCHES	TWO (2) EXTRA DASH MOUNTED ILLUMINATED SWITCHES	0	0
	NGXB1X	FOG LAMPS	FOG LAMPS (ROUND)	9	0
S	3120A2	ROOF & SIDE MARKER LIGHTS	(5) TRUCKLITE CHROME BULLET ROOF MARKER & STANDARD MARKER / DIRECTIONAL SIGNAL	0	0
	LJXCAX	HEADLAMP BULB TYPE	HEADLAMP BULB TYPE, LED, HEATED	0	0
S	LSXJ7X	DAYTIME RUNNING LIGHTS	W/OVERRIDE SWITCH, PARK BRAKE & ENGINE RUNNING ACTIVATED	0	0
S	X2AA1X	DRL OVERRIDE SPEED THRESHOLD	DRL OVERRIDE SPEED THRESHOLD 8 KMPH (5 MPH)	0	0
S	NEXK2X	TAIL LAMPS	LED STOP & TAIL LAMPS W/BACKUP LAMP & LICENSE PLATE MTD IN CLOSING CROSSMEMBER	0	5

				WEIGHT (LB)	
TRAILER CONNECTIONS			**DESCRIPTION**	FRONT	REAR
	330AG8	FIFTH WHEEL	AIR - HOLLAND FW35 SERIES LH RELEASE, NO TILT (AVAIL: 8.82")	0	481
	6DXNXX	FIFTH WHEEL MTG ANGLES/DRILLING	SLIDING 5TH WHEEL MTG, 18.4" TRAVEL	0	64
S	LIXA1X	FIFTH WHEEL ANGLE MATERIAL	STEEL FIFTH WHEEL ANGLES	0	0
S	9DAABX	FIFTH WHEEL ANGLE THICKNESS	5TH WHEEL ANGLE, 10MM THICKNESS	0	0
S	6BX5XX	FIFTH WHEEL OFFSET	50" BOGIESPREAD = -1" OFFSET, 52" BS = 0", 54" BS = 1", 55" BS = 1.5", 4x2 = - 26"	0	0
	E5BAWX	GRD.TO TOP OF FIFTH WHEEL	1308MM (51.5") GROUND TO 5TH WHEEL TOP HEIGHT	0	0
	6EXCMX	FIFTH WHEEL LEG-HEIGHT (KAX Result)	224MM (8.81"), FIFTH WHEEL LEG-HEIGHT (SELECTED BY KAX)	0	0
S	53XBAX	TRAILER GLAD HAND COUPLINGS	GLAD HAND COUPLINGS - NORTH AMERICAN STD	0	0
S	WGXA1X	HAND CONTROL VALVE	HAND CONTROL VALVE FOR TRAILER BRAKES W/ AIR CONNECTIONS OR SERVICE BRAKES W/O AIR CONNECTIONS	0	0
S	WHXQ1X	TRAILER CONNECTIONS	TRAILER AIR BRAKE CONNECTIONS, BACK OF CAB	0	0
S	7KXA3X	TRAILER ACCESS PACKAGE	LOW PROFILE DECK PLATE	18	45
S	51XD1X	HOSE TENDER/TOWEL BAR	HOSE TENDER, POGO STICK (CHASSIS MOUNTED)	0	0
S	321021	TRAILER ELECTRICAL RECEPT	SINGLE, 7 PINS STD SAE TYPE, BACK OF CAB	0	0
	5ZXF8X	TRAILER AIR HOSES	TRAILER BRAKE HOSE STRAIGHT 15' (4570MM) SPIRAL WRAP	0	0
	2UAB7X	TRAILER ELECTRICAL CORD	15' (4570mm) STRAIGHT ELECTRIC CORD, W/ WRAPPED AIR HOSE	0	0
S	3SAA1X	TRAILER CONNECTORS HOLDER	ELECTRICAL PLUG HOLDER (INCLUDES GLAD HAND STORAGE)	0	0

				WEIGHT (LB)	
PTO			**DESCRIPTION**	FRONT	REAR
S	189AK9	TRANSMISSION MOUNTED PTO	mDRIVE Without PTO, Removable Block Off Plate	0	0
S	D4AA1X	AMT/AUTOMATIC TRANS PTO FUNCT.	TRANSMISSION PTO FUNCTIONS BASIC	0	0
S	TYXG3X	PTO - CONTROL	mDRIVE SINGLE PTO PREP KIT W/ ILLUMINATED DASH MOUNTED SWITCH & PIPING FOR LOCAL INSTALL	3	0

				WEIGHT (LB)	
SPECIALTY EQUIPMENT			**DESCRIPTION**	FRONT	REAR
S	7VEZ1X	AUXILIARY POWER UNIT	WITHOUT AUXILIARY POWER UNIT	0	0
S	MCQ01Q	LANE SUPPORT SYSTEM (LSS)	WITHOUT LANE SUPPORT SYSTEM	0	0
S	2PEZ1X	DATA CAPTURE	WITHOUT DATA CAPTURE	0	0
S	1PAZ1X	SURVEILLANCE CAMERA OPTIONS (CA)	WITHOUT CAMERA	0	0

TECHNICAL SPECIFICATION *(cont.)*

CAB INTERIOR (A THRU G)			DESCRIPTION	WEIGHT (LB) FRONT	WEIGHT (LB) REAR
S	198048	SPEEDOMETER -&- GAUGES - UNIT(s) OF MEASURE	U.S. UNITS (PREDOMINANT)	0	0
	CCXD1X	GAUGE - PACKAGE, SECONDARY	2ND GA PKG W/ENG OIL TEMP, TRANS OIL TEMP, PYRO, BOOST PRESS	0	0
	E1AAAX	GAUGE OIL TEMP-REAR AXLE	REAR AXLE OIL TEMP GAUGE IN DID (DRIVER INFORMATION DISPLAY)	0	0
S	4AXC1X	CLIMATE UNIT	ELECTRONIC CONTROLLED CLIMATE CONTROL AIR CONDITION	0	0
S	EEXA1X	CUPHOLDER	CUPHOLDER	0	0
S	I0XAHX	DOME LAMP, INTERIOR	(4) DOME LAMPS - DOOR AND SWITCH ACTIVATED	0	0
	7860E6	FIRE EXTINGUISHER	5LB (ABC RATED) MOUNTED BETWEEN DRIVER SEAT BASE AND DOOR VALVE AIMED REARWARD	9	0
	184AA3	FLOOR COVERING	POLYURETHANE FLOOR MAT W/ REMOVABLE INSERTS	16	0

CAB INTERIOR (H THRU R)			DESCRIPTION	WEIGHT (LB) FRONT	WEIGHT (LB) REAR
S	C52082	INSTRUMENT CLUSTER LANGUAGE	DEFAULT: ENGLISH, SPANISH, FRENCH	0	0
	20XDDX	KEY TYPES FOR DOORS	ALL CHASSIS KEYED ALIKE- (M-083)	0	0
S	13AA1X	KEYLESS ENTRY	W/O ELECTRONIC KEYLESS ENTRY	0	0
	E3XD1X	OVERHEAD CONSOLE	(2) STORAGE COMPARTMENTS AND NET RETAINERS W/CENTER MOUNTING FOR CB PROVISIONS	0	0
S	1740D4	RADIO/RADIO ACCOMMODATION	PREMIUM STEREO, AM/FM, MP3, WEATHER BAND, BLUETOOTH	0	0
S	73AJ1X	RADIO - ANTENNA	48" ANTENNA RIGHT SIDE MIRROR MOUNTED	0	0
	5BXB5X	RADIO ANTENNA - CB	48" ANTENNA LEFT SIDE MIRROR MOUNTED	0	0
S	1WAB1X	RADIO - BINDING POSTS FOR CB	POWER LEADS (5-WAY BINDING POSTS FOR CB RADIO) IN HEADER CONSOLE	0	0
S	5CXB2X	AUDIO SPEAKER LOCATION	SPEAKER LOCATION, IN DOORS, MIDDLE HIGH SIDE PANEL	0	0
S	5JXALX	RADIO - CB RADIO MOUNTING	MOUNTING PLATE AND VELCRO STRAP IN HEADER CONSOLE	0	0
S	21XA1X	REAR WINDOW	REAR WINDOW (FIXED TYPE)	0	0
	IFXC1X	REAR WALL STORAGE COMPARTMENT	INTERIOR STORAGE CONSOLE MTD ON FLOOR BETWEEN SEATS W/12 VOLT POWER OUTLET	29	0
	784044	REFLECTOR KIT	W/O SLEEPER BOX FURNISH KIT PARALLEL TO OUTSIDE SURFACE OF RIDER'S SEAT BASE	12	3

CAB INTERIOR (S THRU Z)			DESCRIPTION	WEIGHT (LB) FRONT	WEIGHT (LB) REAR
	004034	INTERIOR TRIM LEVELS	PREFERRED TRIM PACKAGE, STEEL GRAY (Package 12A)	0	0
	1961B6	SEAT - DRIVER'S	NATIONAL-AIR, WIDE WIDTH/HIGH BACK, 3 CHAMBER AIR LUMBAR	60	16
S	MAP05P	SEAT COVERING - DRIVER'S	DRIVER'S SEAT - BLENDED BLACK & GREY VINYL	0	0
S	197AA1	SEAT - PASSENGER'S	MACK-FIXED, HIGH BACK	40	9
S	MAQ06Q	SEAT COVERING - PASSENGER'S	PASSENGER'S SEAT - BLENDED BLACK & GREY VINYL	0	0
	0HAA1X	SEAT - DUST COVER(S)	SEAT, DUST COVER FOR DRIVER'S SEAT	3	0
	3PXC1X	SEAT ARM REST(S)	INBOARD MOUNTED ARM REST, DRIVER'S & RIDER'S SEAT	5	3
S	592092	SEAT BELT(S)	LAP & SHOULDER (BOTH SEATS) CAB MOUNTED SHOULDER BELT ADJUSTMENT	0	0
S	D8XC1X	SEAT BELT WARNING INDICATOR	SEAT BELT REMINDER IN INSTRUMENT, WITH AUDIO	0	0
S	2QAA1X	STARTER SWITCH	KEY TYPE	0	0
	161021	STEERING WHEEL	2 SPOKE LEATHER GRIP, SATIN ALUMINUM SPOKES, WITH SWITCHES	0	0
S	WSXBAX	WINDSHIELD TYPE	TWO PIECE WINDSHIELD	0	0
	145AA4	CAB GLASS	GUARDIAN ENHANCED PROTECTIVE REAR GLASS W/SAFEFLEX; 50% TRANSMITTANCE	0	0

TECHNICAL SPECIFICATION *(cont.)*

				WEIGHT (LB)	
CAB INTERIOR (S THRU Z)			**DESCRIPTION**	FRONT	REAR
S	148AA3	WINDSHIELD WIPERS	2 SPEED ELECTRIC MOTOR W/INTERMITTENT FEATURE	0	0

				WEIGHT (LB)	
CAB - SLEEPER BOX			**DESCRIPTION**	FRONT	REAR
S	4ZXZ1X	SLPR. BOX - REFRIGERATOR PROV	W/O SLEEPER BOX REFRIGERATOR	0	0

				WEIGHT (LB)	
CAB EXTERIOR			**DESCRIPTION**	FRONT	REAR
	0BAA1X	PERMIT PLATE	2 POL, 304SS 3.5X15" W/SELF-ADH. BK; AT REC. SECTION CAB SILL PL. BELOW BOTH DRS	0	0
S	88AA1X	EMBLEMS OPTION	W/O MISC ORNAMENT CHANGE OPTION	0	0
	MCY01Y	HOOD LATCH TYPE & FINISH	STRAP TYPE HOOD LATCH WITH BRIGHT FINISH	0	0
S	MCG0BG	EXTERIOR TRIM FINISH AND PACKAGES	PINNACLE BLACK AIR INTAKE	0	0
S	400AG0	GRILLE	HERITAGE DESIGN CHROME GRILLE W/ BLACK BACKGROUND	0	0
S	MCD03D	PASSENGER SIDE VISIBILITY OPTIONS	AUXILIARY WINDOW IN RH DOOR	3	0
S	5870G7	GRAB HANDLES	PREMIUM BLACK EXTERIOR CAB GRAB HANDLE, BLACK GRAB HANDLE RH INTERIOR WINDSHIELD POST	0	0
	154AA3	HORN - AIR	(2) MACK RECTANGULAR SINGLE TRUMPET (ONE EACH SIDE OF CAB ROOF)	7	0
S	LXXD1X	HORN - ELECTRICAL	DUAL TONE	5	0
	152AC5	MIRRORS - EXTERIOR	BULLDOG STYLIZED MIRRORS - LH & RH HEATED & MOTORIZED AND ILLUMINATED W/INTEGRAL CONVEX MIRROR	7	0
	157037	SUN VISOR - EXTERIOR	SUN VISOR, EXTERIOR, STAINLESS STEEL (UNPAINTED)	9	0

				WEIGHT (LB)	
AERODYNAMIC DEVICES			**DESCRIPTION**	FRONT	REAR
S	159AA1	CAB AERODYNAMIC PACKAGES	WITHOUT CAB AERODYNAMIC DEVICES	0	0
S	MCM998	FRONT CHASSIS AERODYNAMIC PACKAGE	WITHOUT FRONT AERODYNAMIC FAIRINGS	0	0
S	MCK03K	REAR CHASSIS AERODYNAMIC PACKAGE	WITHOUT REAR AERODYNAMIC FAIRING	0	0

				WEIGHT (LB)	
WHEELS & TIRES			**DESCRIPTION**	FRONT	REAR
	900AV0	TIRES BRAND/TYPE - FRONT	11R24.5 H BRIDGESTONE R268 ECOPIA (14320 lbs) (Total for QTY = 2)	265	0
	5314A1	WHEELS - FRONT	24.5x8.25 ACCURIDE ACCU-LITE 42362x EXTRA POLISHED ALUMINUM, 6.59" OFFSET, 10 HAND HOLE (Total for QTY = 2)	111	0
	9013F1	TIRES BRAND/TYPE - REAR	11R24.5 G BRIDGESTONE M726 ELA (24020 lbs) (DRIVE ONLY) (Total for QTY = 8)	0	1,129
	346316	WHEELS - REAR	24.5x8.25 ACCURIDE ACCU-LITE 42362x EXTRA POLISHED ALUMINUM, 6.59" OFFSET, 10 HAND HOLE (Total for QTY = 8)	0	441
S	15XABX	VALVE STEMS & CAPS	STANDARD VALVE STEMS AND CAPS	0	0
S	MCH03H	FRONT HUB/WHEEL TRIM	WITHOUT FRONT HUB/WHEEL TRIM	0	0
S	MCI03I	REAR HUB/WHEEL TRIM	WITHOUT REAR HUB/WHEEL TRIM (Total for QTY = 2)	0	0
S	80AA1X	WHEEL NUT & FINISH - FRONT (CA)	WHEEL NUT BASIC FINISH, FRONT	0	0
S	3PBA1X	WHEEL NUT & FINISH - REAR (CA)	WHEEL NUT & FINISH BASIC, REAR	0	0

TECHNICAL SPECIFICATION *(cont.)*

COMMUNICATION SYSTEMS			DESCRIPTION	WEIGHT (LB) FRONT	WEIGHT (LB) REAR
S	3YAA1X	CO-PILOT - DISPLAY FEATURES ACCESS LEVEL	CO-PILOT DISPLAY, DRIVER ACCESS LEVEL 1	0	0
S	M30060	TELEMATIC GATEWAY	TELEMATICS GATEWAY, 4G/LTE AND WLAN SYSTEM WITH DIAGNOSTIC SERVICES	0	0

ENGINE ELECTRONICS			DESCRIPTION	WEIGHT (LB) FRONT	WEIGHT (LB) REAR
S	W0XA1X	SHUTDOWN-ENG.OIL PRESSURE	OIL PRESSURE, ENGINE SHUTDOWN	0	0
S	WMXA1X	SHUTDOWN-ENG.COOLANT TEMP	COOLANT TEMP, ENGINE SHUTDOWN	0	0
S	K5XA2X	ENG /OIL TEMP SHUTDOWN	ENGINE PROTECTION (SHUTDOWN)	0	0
S	K7XY1X	LOW IDLE ENGINE RPM	IDLE CONTROL, 600 RPM	0	0
S	X0AB0X	IDLE RPM UP W/LOW VOLTAGE	INCREASE 10 MINUTE MAXIMUM TIME	0	0
S	M3CA1X	IDLE S/D ABS TAMPER CHECK	IDLE SHUTDOWN ABS TAMPER CHECK, ENABLED	0	0
S	B1AZ1X	IDLE S/D WARNING TIME	WITHOUT IDLE S/D WARNING TIME	0	0
S	A8AALX	IDLE S/D IF WARM-UP TEMP	38C DEG (100F), WARM UP TEMP DELAY	0	0
S	A4AAEX	IDLE S/D WARM-UP TIMER	5 MIN. WARM UP TIME DELAY	0	0
S	B0AAAX	IDLE SHUTDOWN IF POWER > LIMIT	ENG IDLE SHUTDOWN TIME OVERRIDDEN IF TORQUE > THAN LIMIT	0	0
S	M4CB1X	IDLE S/D OVERIDE %ENGINE LOAD	IDLE SHUTDOWN OVERIDE UPTO 20% ENGINE LOAD THRESHOLD	0	0
S	D2AAFX	AMBIENT TEMP MIN TRESHOLD	AMBIENT TEMP MIN TRESHOLD, 16 DEG C, (60 DEG F)	0	0
S	D3AAEX	AMBIENT TEMP MAX TRESHOLD	AMBIENT TEMP MAX TRESHOLD, 27 DEG C, (80 DEG F)	0	0
S	B3ABAX	EHT, MAX ROAD SPEED	ELECTRONIC HAND THROTTLE, MAX ROAD SPEED, 16 KMH (10 MPH)	0	0
S	B6ABAX	EHT, MAX ENG SPEED	ELECTRONIC HAND THROTTLE, MAX ENGINE SPEED, 1000 RPM	0	0
S	B4ADAX	EHT, MIN ENG SPEED	ELECTRONIC HAND THROTTLE, MIN ENGINE SPEED, 700 RPM	0	0

TRANSMISSION ELECTRONICS			DESCRIPTION	WEIGHT (LB) FRONT	WEIGHT (LB) REAR
	M050R5	TRANSMISSION DRIVE MODE PACKAGES, mDRIVE	mDRIVE- EZ SHIFT - ECON, & PERF DRIVE MODES, AUTO RETURN (premium)	0	0
S	M08048	ECONO ROLL	ECONO ROLL ENABLE VIA CO-PILOT, mDRIVE ONLY	0	0
S	N1DA1X	mDRIVE MACK PREDICTIVE CRUISE	MACK PREDICTIVE CRUISE LEARNING BY GPS POSITIONING (available with mDRIVE only)	0	0
S	6SAA1X	mDRIVE MACKCELLERATOR	MACKCELLERATOR ENABLE	0	0
S	779001	TRANSMISSION ELECTRONICS PACKAGE	W/O ELEC TRANS PACKAGE OPTION (all non-Allison transmissions)	0	0
	B1EA1X	TRANSM AUTO NEUTRAL ON P-BRAKE	mDRIVE TRANSMISSION PARK BRAKE AUTO NEUTRAL	0	0
S	MAV01V	TRANSMISSION ELECTRONIC SHIFTING PROPERTIES	W/O ALLISON FUELSENSE 2.0 PROGRAMMING	0	0

VEHICLE ELECTRONICS			DESCRIPTION	WEIGHT (LB) FRONT	WEIGHT (LB) REAR
	JCXFPX	ROAD SPEED LIMIT (RSL)	121 KM/H ROAD SPEED LIMITER (75MPH)	0	0
	Y3CE1X	PEDAL SPEED LIMITER	121 KM/H PEDAL ROAD SPEED LIMITER (75MPH)	0	0
S	JDXA1X	CRUISE CONTROL	CRUISE CONTROL	0	0
	JFXPCX	CRUISE CONTROL, MAX SPEED	MAX CRUISE, 121 KPH (75 MPH)	0	0
S	E3AACX	CRUISE CONTROL MIN SPEED	MIN CRUISE, 32 KPH (20 MPH)	0	0
S	E4AAAX	CRUISE RESUME WITH CLUTCH	CRUISE RESUME WITH CLUTCH	0	0
S	E5AACX	ENG BRAKE ENGAGE IN CRUISE	ENG BRK ENGAGE IN CRUISE, 3 MPH, ABOVE SET SPEED	0	0

TECHNICAL SPECIFICATION *(cont.)*

	VEHICLE ELECTRONICS		DESCRIPTION	WEIGHT (LB) FRONT	WEIGHT (LB) REAR
S	X2BB1X	ROAD SPEED LIMIT CONTROL TYPE	RSL CONTROL TYPE NORMAL	0	0
	L2CB1X	PDLO ENGAGED VLS	POWER DIVIDER LOCK OUT (PDLO) ROAD SPEED LIMIT 24KMH (15MPH)	0	0
	Q6FAHX	DIFF LOCK SPEED LIMIT	DIFFERENTIAL LOCK ROAD SPEED LIMIT 24KMH (15MPH)	0	0
S	W5BA1X	MAXIMUM ENG SPEED AT 0 MPH	1000 MAXIMUM ENGINE SPEED AT 0 MPH	0	0
S	A4BAAX	SPEED SENSOR TAMPERING DETECTION	DETECTION OF SPEED SENSOR TAMPERING, ENABLE	0	0
S	8RXAEX	PWR.LIMIT LVL.-MPH SENSOR	ENG TORQUE LIMITED TO 50%, IF SPEED SENSOR TAMPER DETECTED	0	0
S	0PAZ1X	DRIVER PERFORMANCE & BONUS PARAMETERS	WITHOUT DRIVER PERFORMANCE PARAMETERS	0	0
S	G5AAHX	DATAMAX ENGINE OVERSPEED-COMPANY	ENGINE OVERSPEED, ALL CONDITIONS, TIME LOG IF ABOVE 2200 RPM	0	0
S	G2AAGX	DATAMAX ENGINE OVERSPEED-FUEL	ENGINE OVERSPEED, FUELED, TIME LOG IF ABOVE 2100 RPM	0	0
S	G4AAUX	DATAMAX VEHICLE OVERSPEED-ALL	VEHICLE OVERSPEED,ALL COND, TIME LOG IF ABOVE 75MPH (121KMH)	0	0
S	G3AAPX	DATAMAX VEHICLE OVERSPEED-FUEL	VEHICLE OVERSPEED, FUELED, TIME LOG IF ABOVE 70MPH (113KMH)	0	0
S	G1AABX	DATAMAX IDLE LOG DELAY	ENGINE IDLE DELAY TO START LOG, 2 MIN	0	0
S	W9A01X	PERIODIC TRIP LOG DAY OF MONTH	PERIODIC TRIP LOG, DAY 1 OF THE MONTH	0	0

	PTO ELECTRONICS		DESCRIPTION	WEIGHT (LB) FRONT	WEIGHT (LB) REAR
	C8AAAX	FAN ENGAGEMENT WITH PTO ACTIVE	FAN ENGAGEMENT DUE TO PTO, ENABLE	0	0

	PAINT		DESCRIPTION	WEIGHT (LB) FRONT	WEIGHT (LB) REAR
S	950AC0	PAINT DESIGN	SINGLE COLOR	0	0
S	924014	PAINT TYPE	SOLID PAINT	0	0
	9443K4	PAINT COLOR - FIRST COLOR	VIPER RED; B9247	0	0
S	945998	PAINT COLOR - SECOND COLOR	NO SECOND TRUCK COLOR PROVIDED; NO COLOR	0	0
S	946998	PAINT COLOR - THIRD COLOR	NO THIRD TRUCK COLOR PROVIDED; NO COLOR	0	0
S	996AA3	PAINT - CAB PAINT SYSTEM	PAINT - CAB, URETHANE CLEAR COAT	0	0
S	MPB944	CAB COLOR	SAME AS FIRST COLOR - CAB	0	0
S	MPD944	HOOD COLOR	SAME AS FIRST COLOR - HOOD	0	0
S	940944	MIRROR COVER COLOR	SAME AS FIRST COLOR - MIRROR COVER	0	0
S	MPA998	ROOF FAIRING COLOR	WITHOUT ROOF FAIRING	0	0
S	95103K	CHASSIS RUNNING GEAR	MACK BLACK (60 GLOSS); 250-12370	0	0
S	958028	BUMPER	W/O OPTIONAL BUMPER PAINT	0	0
S	959019	FUEL TANK - ***NO INVENTED VARIANTS ALLOWED in the FUEL TANK PAINT FAMILY***	W/O OPTIONAL FUEL TANK PAINT	0	0
S	962032	HUBS & DRUMS-FRONT	SAME AS CHASSIS RUNNING GEAR	0	0
S	963033	HUBS & DRUMS-REAR	SAME AS CHASSIS RUNNING GEAR	0	0

	CALCULATED CODES - KAX		DESCRIPTION	WEIGHT (LB) FRONT	WEIGHT (LB) REAR
S	9JXA1X	PROPCALC SELECTION	YES, THE ORDER MUST BE CALCULATED	0	0
	D5EA1X	AUTO ROUTING & CLIPPING, CENTER	AUTOMATIC ROUTING & CLIPPING PLACEMENT, CENTER SECTION	0	0

TECHNICAL SPECIFICATION *(cont.)*

				WEIGHT (LB)	
BASE WARRANTY & PURCHASED COVERAGES			**DESCRIPTION**	FRONT	REAR
S	898002	VEHICLE WARRANTY TYPE	NORMAL DUTY WARRANTY CLASSIFICATION	0	0
S	M50020	BASIC CHASSIS COVERAGE	NORMAL DUTY STANDARD BASE COVERAGE 12 MONTHS/100,000 MILES (160,934 KM)	0	0
	M8301T	EMISSION - SURCHARGE	EPA (only) for Mack MP7 / MP8 Diesel	0	0
S	M51021	ENGINE WARRANTY	MACK MP7/MP8 BASE ENGINE COVERAGE 24 MONTHS / 250,000 MILES (402,000KM)	0	0
S	M52022	EMISSION COMPONENT COVERAGE	US and CANADA EQUIPPED VEHICLE EMISSION COMPONENTS COVERAGE 60 MONTHS/100,000 MILES (161,000 KM)	0	0
	M540Y4	TRANSMISSION WARRANTY	mDRIVE HD TRANSMISSION NORMAL DUTY COVERAGE: 60 MONTHS OR 750,000 MILES	0	0
	M550G6	CARRIER & AXLE HOUSING WARRANTY	STANDARD MACK NORMAL DUTY COVERAGE 60 MONTHS / 750,000 (1,207,008 KM)	0	0
S	M56026	AIR CONDITIONING WARRANTY	AIR CONDITIONING STANDARD COVERAGE (Sealed System Only) 12 MONTHS UNLIMITED MILEAGE	0	0
S	M57027	CHASSIS TOWING WARRANTY	STANDARD NORMAL / HEAVY DUTY CHASSIS TOWING 90 DAYS OR 5,000 MILES	0	0
S	M58028	ENGINE TOWING WARRANTY	STANDARD MACK ENGINE TOWING COVERAGE 24 MONTHS/250,000 MILES (402,000 KM)	0	0

				WEIGHT (LB)	
CONNECTED SERVICES			**DESCRIPTION**	FRONT	REAR
S	S03011	MACK INTEGRATED UPTIME	MACK INTEGRATED UPTIME - 24 MONTHS	0	0
	S04011	MACK CONNECT LOCATION & REPORTING	MACK CONNECT LOCATION & REPORTING - 24 MONTHS	0	0
S	S05010	FLEET INTEGRATION	WITHOUT FLEET INTEGRATION	0	0
S	S06400	PARTNERED SERVICES	NO PARTNERED SERVICES PROVIDED	0	0

FRONT / REAR AXLE WEIGHTS (LB)	9487	8696
TOTAL WEIGHT (LB)	18182	

VEHICLE SPECIFICATION/CALCULATED PERFORMANCE SUMMARY			
Description	Dwg Ref	Length	UOM
Front Frame Extension	FE	0.0	INCHES
Bumper to Front Axle	BA	29.8	INCHES
Eff. Bumper to Front Axle	N/A	29.8	INCHES
Wheelbase	WB	231.1	INCHES
Rear Overhang	OH	56.5	INCHES
Overall Length	OL	317.4	INCHES
Bumper to Back of Cab	BBC	117.3	INCHES
Eff. Bumper to Back of Cab	EBBC	128.8	INCHES
Eff. Cab to Rear Axle	ECA	132.1	INCHES
Eff. Front Axle to Back of Cab	EAC	99.0	INCHES
Eff. Cab to End of Frame	ECEF	188.6	INCHES
Unladen 5th Wheel Height	5W	51.5	INCHES
Unladen Frame Height	FH	43.2	INCHES
Cab Height	CH	73.0	INCHES
Overall Height	OVH	153.2	INCHES
Driver CG	DCG	73.2	INCHES
52" AXLE SPACING (BOGIE WHEELBASE)	BS	52.0	INCHES

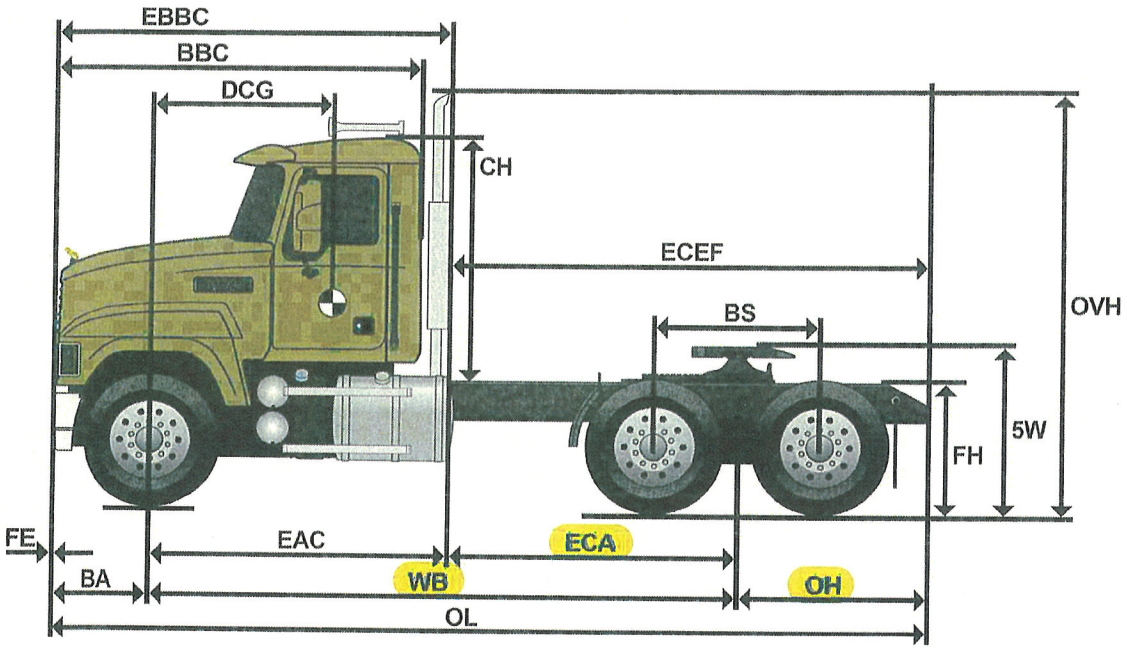

VEHICLE SPECIFICATION/CALCULATED PERFORMANCE SUMMARY				
Description	Sales Code	Dwg Ref	Left Value(in)	Right Value(in)
Wheelbase	N/A	WB	231.1	231.1
Available Rail Space Right	N/A	ARSR	N/A	23.9
Available Rail Space Left	N/A	ARSL	46.0	N/A
Eff. Front Axle to Back of Cab	N/A	REF	99.0	99.0
Front Axle To Fender	CDX30X	N/A	48.4	35.4
Cleartech One Unit	DPF04F	N/A	0.0	50.0
Battery Box	393AA9	N/A	0.0	17.0
93 GALLON (350 L) 26" ALUMINUM ROUND / 93 GALLON (350 L) 26" ALUMINUM ROUND	288AB7 / 290AB7	N/A	46.0	46.0
Ad-Blue Tank	DF10N1	N/A	17.8	0.0
Rear Deck Access	MZ7027	N/A	12.0	0.0
Quarter Fender	68XC1X	N/A	10.8	10.8
Drive Tire Radius	9013F1	N/A	22.1	22.1

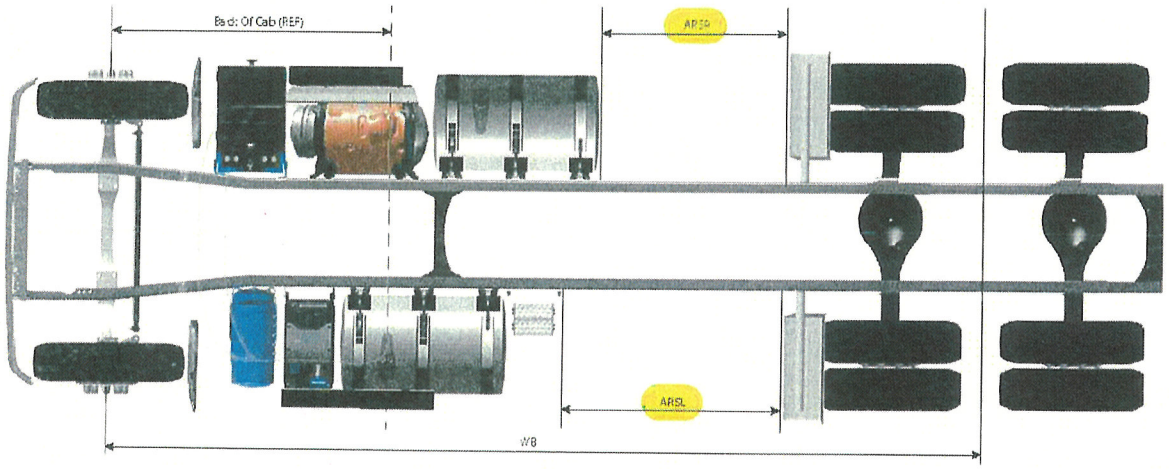

Top View image is intended for illustration purposes only and is not presented to scale. Wheelbase, Axle Spacing and After frame are not shown as specified, but are a representation. Customer Adaptation (CA) options and relocated components are not represented in these images. Most CA options impact the variation of the image, thus an image may not populate. Calculations are approximate to a tolerance of ± 4 inches due to component mounting variation. Certain chassis component options are NOT represented in the Top View image, such as, but not exclusive to, Front Frame Extensions, Fuel Water Separators, Air Dryers, PTOs, Fifth Wheels, Chassis Fairings, Toolboxes, Trailer Connections. For further information on these items and their respective locations on your specification, please refer to the data sheets associated with those items in the configurator.

Inputs Required	DWGRef	Inputs	UOM
Trailer Width	Trailer Width	102.0	INCHES
Corner Radius		6.0	INCHES
Landing Gear Location	Landing Gear Location	120.0	INCHES
Trailer Dip Clearance		3.0	INCHES
Kingpin Location from front of Trailer	Kingpin	36.0	INCHES

VEHICLE SPECIFICATION SUMMARY			
	Length	UOM	Sales Code
Wheelbase	231.1	INCHES	N/A
BOC Exhaust Space	11.5	INCHES	130AC4
Fifth Wheel Rearmost Position	0.0	INCHES	6BX5XX
Fifth Wheel Travel	18.4	INCHES	6JXAMX
Rear Overhang	56.5	INCHES	N/A

CALCULATED PERFORMANCE SUMMARY					
		Fifth Wheel Settings			
	Dwg Ref	Forwardmost		Rearmost	
Trailer Swing Clearance	A	50.7	INCHES	69.0	INCHES
Trailer Swing Radius	B	60.0	INCHES	60.0	INCHES
Fifth Wheel Setting	C	18.4	INCHES	0.0	INCHES
Landing Gear Radius	D	89.6	INCHES	74.9	INCHES
Landing Gear Clearance	E	-5.6	INCHES	9.1	INCHES
Cab/Trailer Gap (when straight ahead) - from rear edge of cab side fairings	N/A	89.2	INCHES	107.6	INCHES
Cab/Trailer Gap (when straight ahead) - from back wall of cab	N/A	89.2	INCHES	107.6	INCHES
Cab/Trailer Gap (when turned 90 degrees) - from rear edge of cab side fairings	N/A	74.2	INCHES	92.6	INCHES

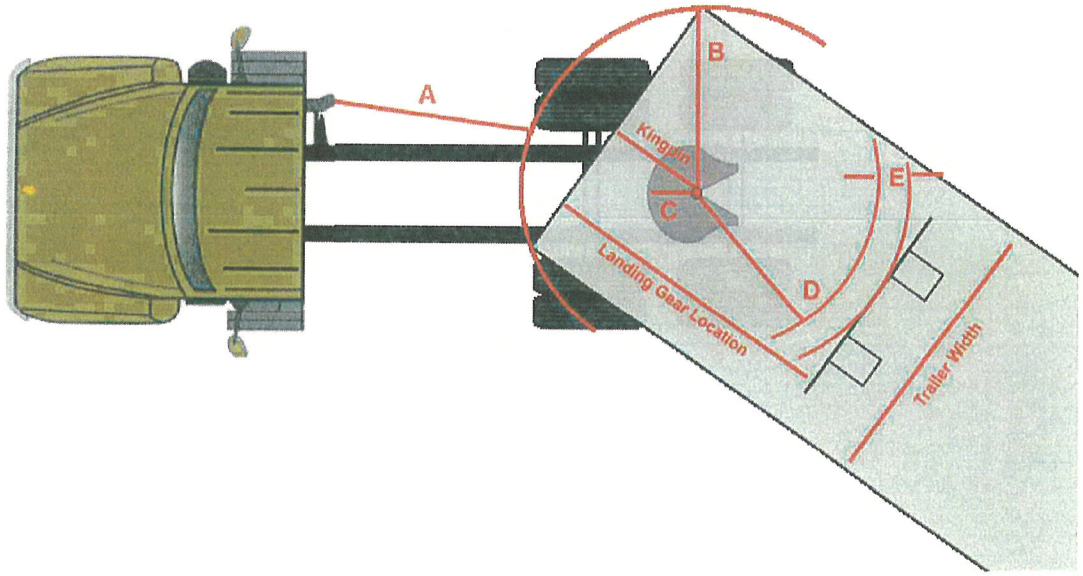

VEHICLE SPECIFICATION/CALCULATED PERFORMANCE SUMMARY			
Description	Dwg Ref	Length	UOM
SAE Turning Radius	A*	36.1	FEET
Adjusted Turning Radius	A	40.5	FEET
Curb-to-Curb Diameter	B	81.9	FEET
Wall-to-Wall Diameter	C	88.6	FEET

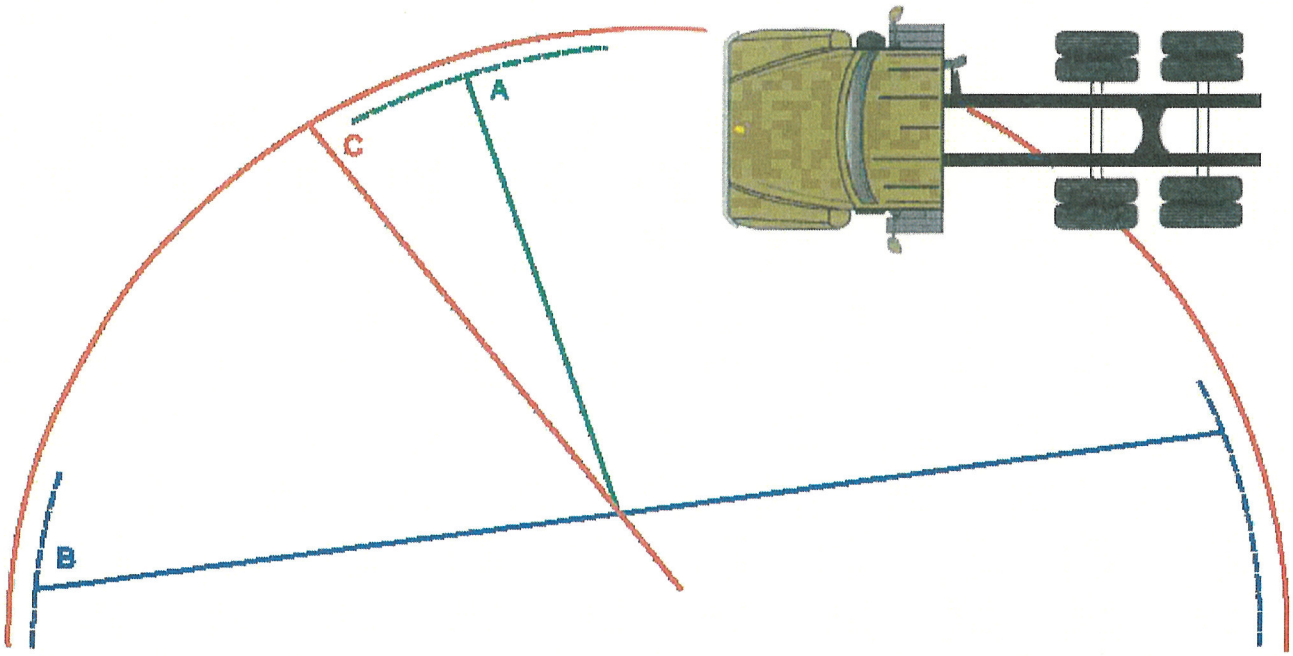

Tests have shown that the true location of the turning center is further to the rear than midway between drive axle sets (where applicable)

The actual location of the turning center depends on:

- Whether the drive tire equipment is single or dual.
- The overall load distribution for the vehicle (front/rear, between drive axles) in a loaded condition
- Manufacturing tolerances within the steering components